ME301WS
30-INCH SINGLE BUILT-IN OVEN
MASTERPIECE® COLLECTION

Thermador

FEATURES & BENEFITS

- Specially crafted gray glass on stainless steel for a luxurious look and finish
- Designed for flexibility—standard or flush installation into kitchen cabinets
- SoftClose® door ensures ultra smooth closing of the oven door
- 1 Full Access® telescopic rack
- Fast 2-hour self clean mode
- Fast preheat (around 7 minutes)

GENERAL PROPERTIES	
Heating Modes	
(13) Bake, Broil, Roast, Convection Bake, Convection Broil, Convection Roast, Proof, Warm, Pizza, True Convection, Dehydrate, Speed Convection, Slow Roast	
Sabbath	Yes
Cleaning Type	Self Clean / Easy Clean
Telescopic Rack(s)	1
Illumination Type	Halogen
Interior Lights	2
Home Connect® (Wi-Fi Enabled)	Yes
OVEN PERFORMANCE	
Bake Element	2,400 W
Broil Element	3,800 W
Convection Element	2,000 W
TECHNICAL DETAILS	
Watts	6,400 W
Circuit Breaker	30 A
Volts	240 / 208 V
Frequency	60 Hz
Plug Type	Fixed Connection, No Plug
Conduit	60" 4-Wire
Energy Source	Electric
DIMENSIONS & WEIGHT	
Overall Appliance Dimensions (HxWxD)	29" x 29 3/4" x 24 1/2"
Trim Overlaps (Top – Sides – Bottom)	3/8" to 2" – 9/16" – 0"
Required Cutout Size (HxWxD) – Standard	27"–28 5/8" x 28 1/2" x 23 1/2"
Required Cutout Size (HxWxD) – Flush	29 1/8" x 30" x 24 1/2"
Oven Cavity Size	4.5 cu. ft.
Overall Oven Interior Dimensions (HxWxD)	17 3/4" x 24" x 17 7/8"
Usable Oven Interior Dimensions (HxWxD)	13 1/2" x 21 5/8" x 16 1/4"
Net Weight	174 lbs
ACCESSORIES (INCLUDED)	
1 Telescopic and 2 Standard Oven Racks, Meat Probe	
WARRANTY	
Limited Warranty Parts and Labor	2 Year

†To be fully ADA compliant, these units must be installed according to ADA guidelines. Please check current ADA requirements for guidance on installation.

ME301WS
30-INCH SINGLE BUILT-IN OVEN
MASTERPIECE® COLLECTION

Thermador

INSTALLATION DETAILS

Single Oven
Bottom Hinge

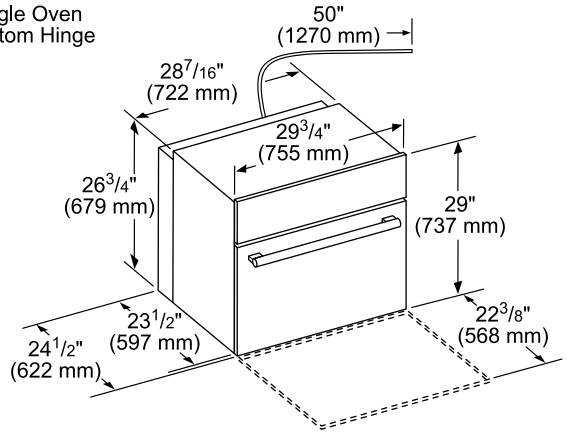

measurements in inches (mm)

Door Handle Depth*

Masterpiece Series Handle

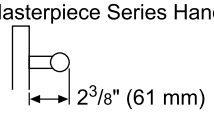

*Protrusion of handle from door skin

Single Oven Wall Mount Installation

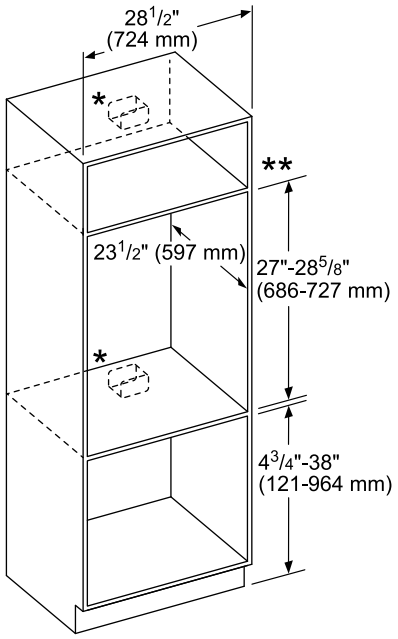

* For single ovens installed into a wall cabinet, the junction box may be located above, beneath, left or right of the unit within reach of the power cord.

** For oven installation in a wall cabinet, the control panel overlap is a min. 3/8" (10 mm) to max. 2" (51 mm).

measurements in inches (mm)

Dimensions for
Under-Counter Installation

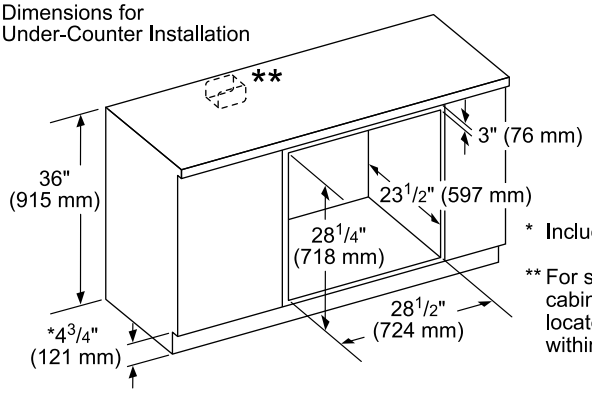

* Includes 3/4" (19 mm) base plate.

** For single ovens installed under a cabinet, the junction box should be located to the right or left of the unit within reach of the power cord.

measurements in inches (mm)

Flush Install

Top View

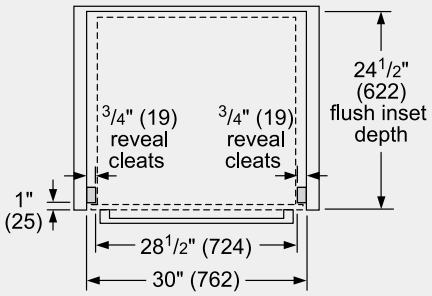

Side View

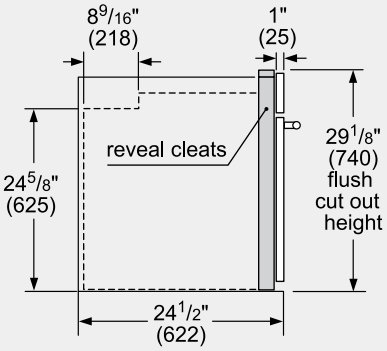

measurements in inches (mm)

PFAS

ME301WS
30-INCH SINGLE BUILT-IN OVEN
MASTERPIECE® COLLECTION

INSTALLATION DETAILS

Standard installation
Single oven, double oven or combo oven over warming or storage drawer

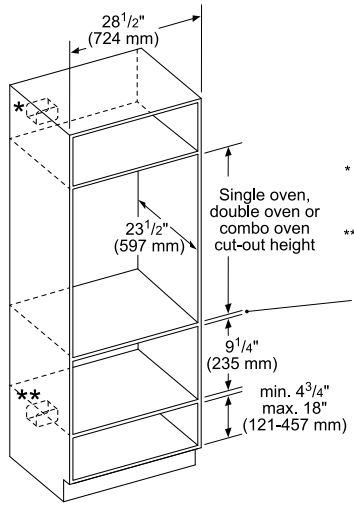

* Wall oven junction box may be located above or to the right or left of the unit within reach or the power cable.

**Electrical hook-up may be located below (depending on space) or next to the drawer within reach of the power cable.

Minimum 3/4" (18 mm) required between cut-outs.

measurements in inches (mm)

Flush installation
Single oven over storage or warming drawer

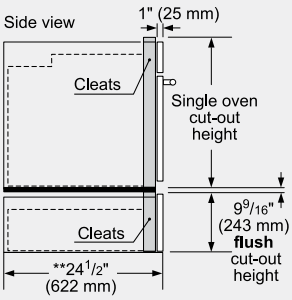

Single wall oven

*IMPORTANT: Base has to be able to support the weight of the oven. Please check oven manual for minimum weight requirements.

minimum 1/2" (13 mm) required between cut-outs*

Warming drawer

**For WD30W, the installed dimension may differ. This drawing based on a 3/4" (19 mm) thick custom panel.

measurements in inches (mm)

Standard installation
30" speed oven or microwave above a single oven***

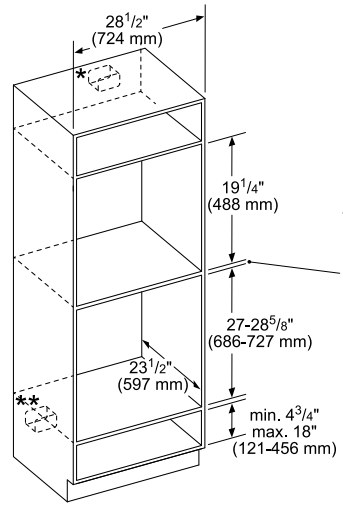

* Junction box may be located above or next to the unit within the reach of the power cable.

**Junction box may be located below (depending on space) or next to the unit within the reach of the power cable.

***Most combinations available as combo oven (one cut-out, one electrical hook-up).

Minimum dimension between cut-out:
- 1" (25 mm) for wall oven cut-out height of 28 5/8" (727 mm)
- 2 5/8" (67 mm) for wall oven cut-out height of 27" (686 mm).

measurements in inches (mm)

Flush installation
Speed oven or microwave above a 30" single oven**

***Flush installation requires a base plate underneath the body: 30" products–Dimensions: H 5/16" (8 mm) x W 28 1/2" (724 mm) x D 22 1/2" (571 mm)

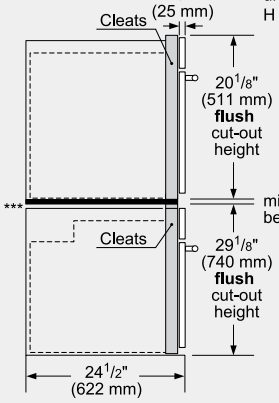

minimum 1/2" (13 mm) required between cut-out*

*IMPORTANT: Base has to be able to support the weight of the oven. Please check oven manual for minimum weight requirements.

**Most combinations available as combo oven (one cut-out, one electrical hook-up).

measurements in inches (mm)

ME301WS
30-INCH SINGLE BUILT-IN OVEN
MASTERPIECE® COLLECTION

INSTALLATION DETAILS

SIDE-BY-SIDE INSTALLATION – TOP VIEW

Standard

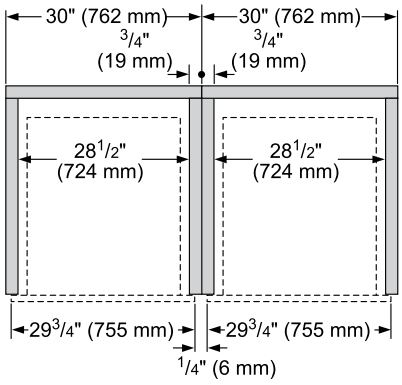

IMPORTANT: When installing an oven in combination, a minimum distance between the ovens is required. Refer to the oven installation manual for all other measurements.

measurements in inches (mm)

NOTE: Conventional ovens with a serial number beginning with "FD009" require accessory kit TWO30YS for Standard or Flush side-by-side installation with another oven or with any other approved product. This kit must be purchased separately and installed prior to installing the oven in the cabinetry. Refer to the Oven Installation Guide for additional information.

Flush

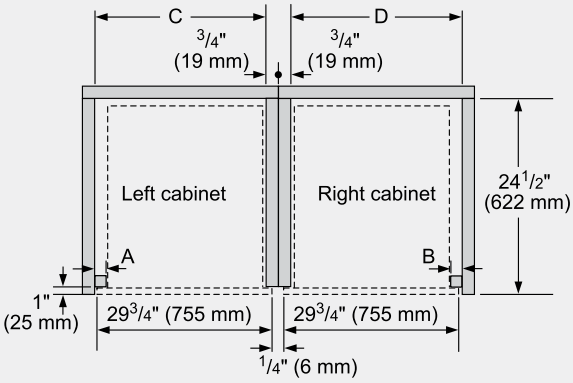

Combination Type	A Left reveal cleat	B Right reveal cleat	C cut-out width	D cut-out width
Flush Bottom hinge	3/4" (19 mm)	3/4" (19 mm)	29 1/4" (743 mm)	29 1/4" (743 mm)
Flush Side Hinge (Left)	1 1/2" (38 mm)	N/A*	30" (762 mm)	N/A*
Flush Side Hinge (Right)	N/A*	1 1/2" (38 mm)	N/A*	30" (762 mm)

*Installation not recommended

measurements in inches (mm)

THERMADOR SIDE-BY-SIDE BUILT-IN OVEN
COMBINATION GUIDE

The following **OVENS** are approved to be installed side-by-side in combination and the installation has been certified by CSA. This guide is only effective with the use of the Thermador built-in oven side-by-side accessory kit TWO30YS. The built-in oven side-by-side accessory kit is required for approved installation.

BUILT-IN OVENS

Conventional Ovens*	Steam Ovens
ME301WS	MEDS301WS
MED301WS	PODS301WS
MED301LWS	MEDS301WS w/ SDS30WC
MED301RWS	PODS301WS w/ SDS30WC
PO301W	
POD301W	
POD301LW	
POD301RW	

The following **OVENS** and **DRAWERS** are approved by BSH Home Appliances Corporation to be installed in combination. These products, identified in the table below, may be installed in combination with other cooking units. The suitability of the combination has not been evaluated by CSA.

BUILT-IN OVENS

Conventional Ovens*	Steam Ovens	Microwave Ovens	Speed Ovens
ME301WS	MEDS301WS	MB30WS	MC30WS
MED301WS	PODS301WS	MB30WP	MC30WP
MED301LWS	MEDS301WS w/ SDS30WC	MB30WS w/ SD30WC	MC30WS w/ SD30WC
MED301RWS	PODS301WS w/ SDS30WC	MB30WP w/ SD30WC	MC30WP w/ SD30WC
PO301W		MB30WS w/ WD30WC	MC30WS w/ WD30WC
POD301W		MB30WP w/ WD30WC	MC30WP w/ WD30WC
POD301LW			
POD301RW			

*Conventional ovens with a serial number beginning with "FD009" require accessory kit TWO30YS for side-by-side installation with another oven or in combination with any other approved product. All parts in the kit may not be required. Refer to the Oven Installation Guide for additional information.

These warranties give you specific legal rights and you may have other rights that vary from state to state. Limited warranty from date of delivery. For complete warranty details, refer to your Use & Care manual, or ask your dealer.

Specifications are for planning purposes only. Refer to installation instructions and consult your countertop supplier prior to making counter opening. Consult with a heating and ventilation engineer for your specific ventilation requirements. For the most detailed information, refer to installation instructions accompanying product or write to Thermador indicating the model number. Specifications are correct at time of printing. Thermador reserves the right to change product specifications or design without notice. Some models are certified for use in Canada. Thermador is not responsible for products that are transported from the U.S. for use in Canada.

1 800 735 4328 | USA THERMADOR.COM | CANADA THERMADOR.CA | ©2026 BSH HOME APPLIANCES CORPORATION. ALL RIGHTS RESERVED.