5.0 cu. ft. Front Load Washer

MHW8630H

Metallic Slate
MHW8630HC

Also available in:

White **MHW8630HW**

Capacity

Total	5.0 cu. ft.

General Features & Properties

24 Hr Fresh Hold® Option
Optimal Dose Dispenser
Quick Wash Cycle
Sanitize Cycle
Maytag® Commercial Technology
10-Year Limited Parts Warranty† on the Direct Drive Motor and Stainless Steel Wash Basket
Remote Start
Cycle Notifications
Troubleshoot

Electrical Details

Amps	15 or 20
Volts	120

Certifications

ADA Compliant	Yes
ENERGY STAR® Certified	Yes
Connected/Smart Appliance	Yes

Technical Details

Drum Material	Stainless Steel
Control Location	Front
Control Type	Knobs
Number of Cycles	14
Washer Cycle Selections	Bulky Items Clean Washer with affresh® Colors Custom Cycle Delicates Drain & Spin Heavy Duty Normal Overnight Wash & Dry (12hr) Quick Wash Sanitize Towels Whites Wrinkle Control
Number of Options	10
Washer Option Selections	Delay Wash Extra Power / Boost Option Remote Enable Steam Clean

Dimensions

Product Dimensions (H x W x D)	38-5/8" x 27" x 32-15/16"
Depth with Door Open 90°	52-15/16"

Reference Material

Install Guide

Use & Care Guide

Energy Guide

Warranty

Key Features & Benefits

Powerful Cleaning
Most Powerful Cleaning in the industry* driven by the Heavy Duty cycle with Extra Power button.

Extra Power Button
Some stains dissolve best in hot water. Others in cold. With the push of a button, Maytag fights both in a single load. The Extra Power button boosts stain-fighting performance on any wash cycle with a dual-temperature wash.

Smart Appliance
Stay in control and efficiently manage laundry from anywhere.** Remotely start or stop your appliance and get end of cycle notifications so no load is left behind. Troubleshoot select issues to avoid unnecessary service calls and help ensure dependable performance, year after year. Get personalized tips to help you best clean your clothing and maximize the power of your Maytag® appliances.

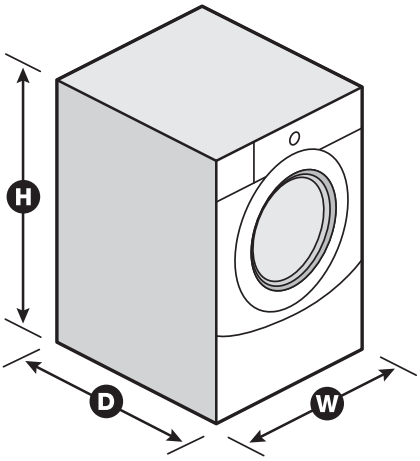

*Models with Extra Power option: MHW8630H, MHW6630H, MHW5630H. Based on cleaning score of a 20-lb load, among leading front load brands, Heavy Duty cycle plus Extra Power vs. comparable cycles and options. **Appliance must be set to remote enable. WiFi & App Required. Features subject to change. Details and privacy info at maytag.com/connect. †Visit maytag.com for warranty details. NOTE: Dimensions are for planning purposes only. For complete details, see Installation Instructions packed with product. Specifications subject to change without notice.

®/™ © 2020. All rights reserved. Printed in the U.S.A. D200104XXD. MHW8630HSpecSheetV01.