4.8 cu. ft. Front Load Washer

MHW6630H

Metallic Slate
MHW6630HC

Also available in:

White **MHW6630HW**

Capacity

Total	4.8 cu. ft.

General Features & Properties

Quick Wash Cycle
Sanitize Cycle
Maytag® Commercial Technology
10-Year Limited Parts Warranty** on the Direct Drive Motor and Stainless Steel Wash Basket
Internal Heater
American Pride
Late Add Feature
Steam Option
Advanced Vibration Control™ Plus

Electrical Details

Amps	15 or 20
Volts	120

Certifications

ADA Compliant	Yes
ENERGY STAR® Certified	Yes

Technical Details

Drum Material	Stainless Steel
Control Location	Front
Control Type	Knobs
Number of Cycles	12
Washer Cycle Selections	Bulky Items Clean Washer with affresh® Colors Delicates Drain & Spin Heavy Duty Normal Quick Wash Sanitize Towels Whites Wrinkle Control
Number of Options	9
Washer Option Selections	Delay Wash Extra Power / Boost Option Extra Rinse Steam Clean

Dimensions

Product Dimensions (H x W x D)	38-5/8" x 27" x 32-15/16"
Depth with Door Open 90°	52-15/16"

Reference Material

Install Guide

Use & Care Guide

Energy Guide

Warranty

Key Features & Benefits

Powerful Cleaning
Most Powerful Cleaning in the industry* driven by the Heavy Duty cycle with Extra Power button.

Extra Power Button
Some stains dissolve best in hot water. Others in cold. With the push of a button, Maytag fights both in a single load. The Extra Power button boosts stain-fighting performance on any wash cycle with a dual-temperature wash.

16 Hr Fresh Hold® Option
The 16-Hr Fresh Hold® option keeps clean clothes smelling fresh in the washer with an internal fan and intermittent tumbling that circulate air through clothes for up to 16 hours after the wash cycle ends.

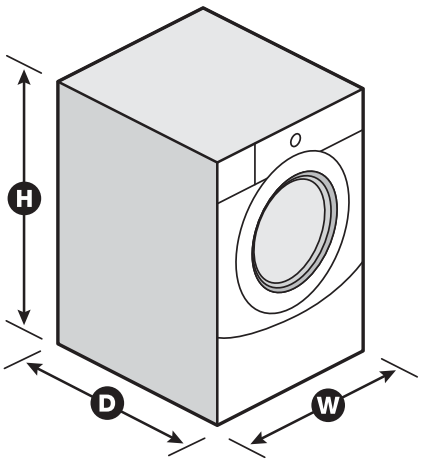

*Models with Extra Power option: MHW8630H, MHW6630H, MHW5630H. Based on cleaning score of a 20-lb load, among leading front load brands, Heavy Duty cycle plus Extra Power vs. comparable cycles and options. **Visit maytag.com for warranty details. NOTE: Dimensions are for planning purposes only. For complete details, see Installation Instructions packed with product. Specifications subject to change without notice.

®/™ © 2020. All rights reserved. Printed in the U.S.A. D200104XXD. MHW6630HSpecSheetV01.